MICRO SWITCH
FREEPORT ILLINOIS U S A
A DIVISION OF HONEYWELL
FSC MFG CODE 91929

SWITCH -TOGGLE

CATALOG LISTING
12TS95 SERIES
CHART 1

THIS DRAWING COVERS A PROPRIETARY ITEM AND IS THE PROPERTY OF MICRO SWITCH. A DIVISION OF MINNEAPOLIS-HONEYWELL REGULATOR CO. THIS DRAWING IS NOT TO BE COPIED OR USED WITHOUT THE APPROVAL OF MICRO SWITCH.

CAT. LIST.	CIRCUIT WITH TOGGLE IN: EXTREME POSITION KEYWAY 1-2 SIDE 4-5	CENTER	EXTREME POSITION OPPOSITE 2-3 SIDE 5-6	ELECTRICAL DATA
12TS95-1	ON	OFF	ON	L312
12TS95-2	OFF	NONE	ON	10A 277 VAC, 20A 125 VAC
12TS95-3	ON	NONE	ON	1 1/2 HP 125, 250 VAC
©	MOM ON	NONE	OFF	
12TS95-7	MOM ON	OFF	MOM ON	
©	MOM ON	NONE	ON	
12TS95-4	MOM OFF	NONE	ON	
12TS95-5	MOM ON	OFF	ON	

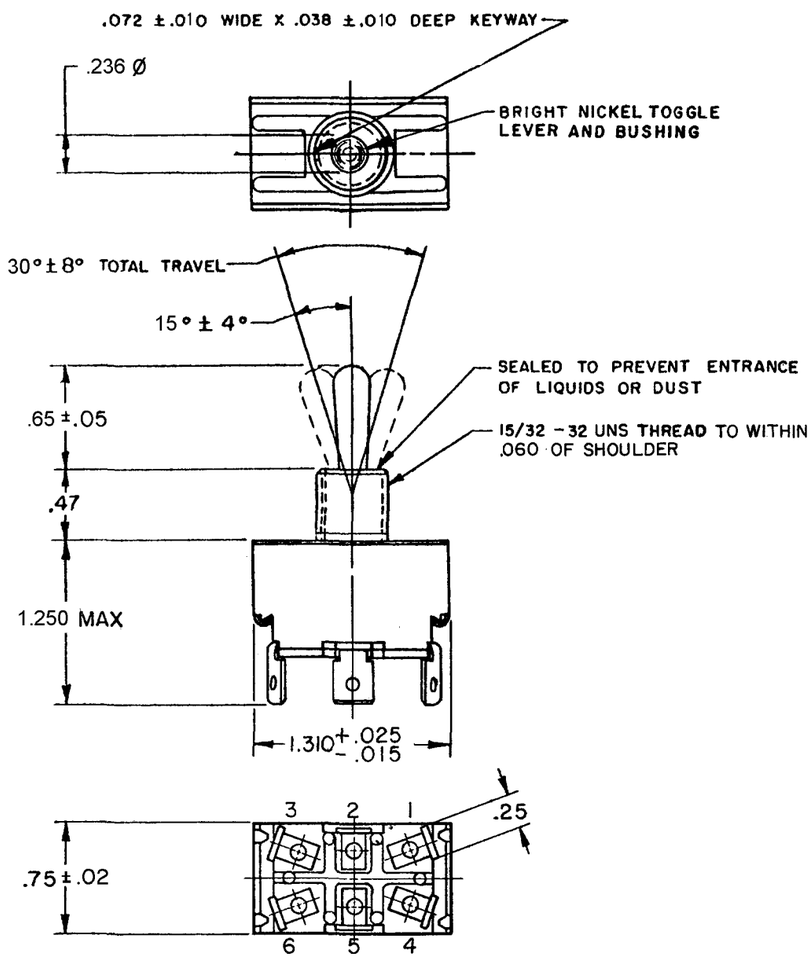

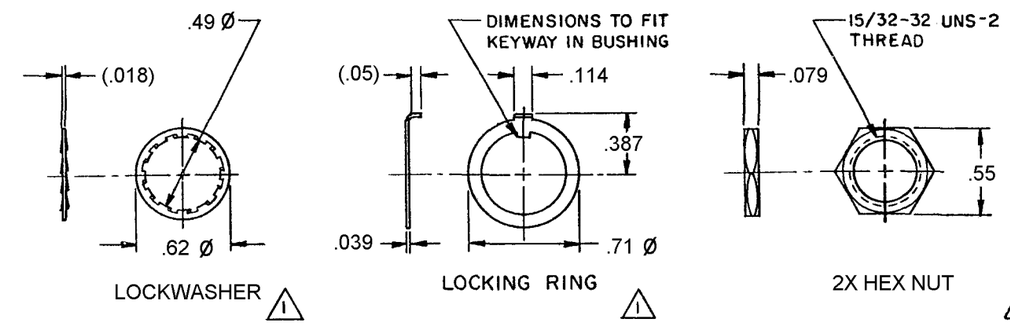

NOTES
1. FURNISHED UNASSEMBLED
2 - CIRCUIT DESIGNATION AND MICRO SWITCH CAT. LISTING MARKED ON SIDE OF SWITCH
3 - SWITCH TERMINALS MAY BE USED WITH AMP RECEPTACLE NO. 41194 (OR EQUIVALENT)
4 - VISUAL DIFFERENCES IN TERMINAL SHAPES AND PLATING POSSIBLE

SCALE FULL
DO NOT SCALE PRINT
UNLESS OTHERWISE NOTED
DIMENSIONS ARE IN INCHES
TOLERANCES ARE:

ONE PLACE	(.0)	±.030
TWO PLACE	(.00)	±.015
THREE PLACE	(.000)	±.005
ANGLES		±

WEIGHT .10 LB MAX

CATALOG LISTING 12TS95 SERIES CHART 1
PAGE 1 OF 1
RELEASE NO. C029429 (PR)
ISSUE 17

REVISIONS		
A	C080402	JALA 11 APR 95
B	C093667	JAF 26 JAN 99
C	203418	CSL 26 JUN 01
D	0001107	KED 11 AUG 03
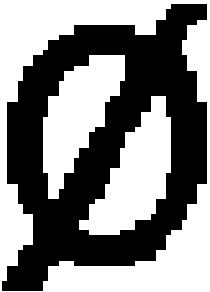
RASTER
DRAWN L.S.D. 8 SEPT 72
CHECK LSD 28 OCT 72
CHECK JMG 28 OCT 72
CHECK
REPL ACLS